10B Metal hoods/housings
- for high voltage inserts(HVE Series)

Degree of protection： IP67

Hoods, side entry

Thread	Designation	Order No.
M20	WV10B-SE-2L/SC-M20	124 110 541 1001
PG16	WV10B-SE-2L/SC-PG16	124 110 541 1002

Please refer to page 15-02 for choosing proper model of lock.

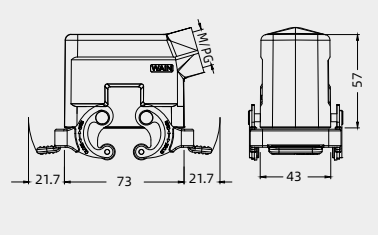

Hoods, side entry, high construction

Thread	Designation	Order No.
M25	WV10B-SEH-2L/SC-M25	124 110 541 5001
M32	WV10B-SEH-2L/SC-M32	124 110 541 5002
PG21	WV10B-SEH-2L/SC-PG21	124 110 541 5003
PG29	WV10B-SEH-2L/SC-PG29 with sleeve	124 110 541 5004
M25	WV10B-SEH-2L/SC-M25 WS	124 110 541 5103
M32	WV10B-SEH-2L/SC-M32 WS	124 110 541 5104
PG21	WV10B-SEH-2L/SC-PG21 WS	124 110 541 5111
PG29	WV10B-SEH-2L/SC-PG29 WS	124 110 541 5012

Please refer to page 15-02 for choosing proper model of lock.

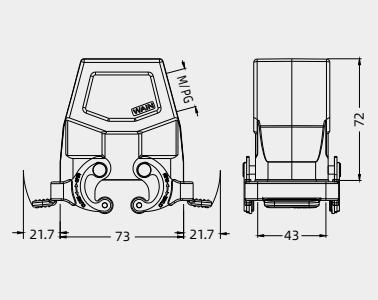

Hoods, top entry

Thread	Designation	Order No.
M20	WV10B-TE-2L/SC-M20	124 110 441 1001
PG16	WV10B-TE-2L/SC-PG16	124 110 441 1002

Please refer to page 15-02 for choosing proper model of lock.

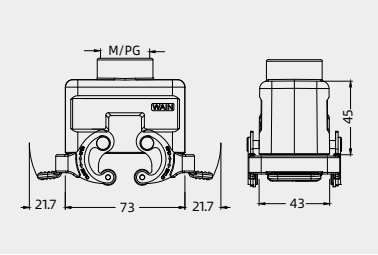

Hoods, top entry, high construction

Thread	Designation	Order No.
M25	WV10B-TEH-2L/SC-M25	124 110 441 5001
M32	WV10B-TEH-2L/SC-M32	124 110 441 5002
PG21	WV10B-TEH-2L/SC-PG21	124 110 441 5003
PG29	WV10B-TEH-2L/SC-PG29 with sleeve	124 110 441 5004
M25	WV10B-TEH-2L/SC-M25 WS	124 110 441 5103
M32	WV10B-TEH-2L/SC-M32 WS	124 110 441 5104
PG21	WV10B-TEH-2L/SC-PG21 WS	124 110 441 5111
PG29	WV10B-TEH-2L/SC-PG29 WS	124 110 441 5112

Please refer to page 15-02 for choosing proper model of lock.

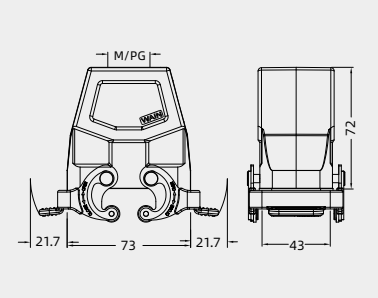

Bulkhead mounted housings
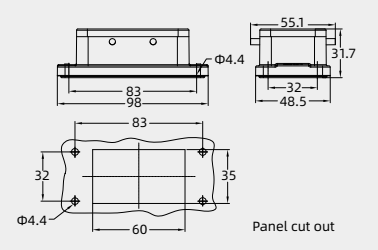
Thread	Designation	Order No.
---	WV10B-BK-4B	124 110 330 1101